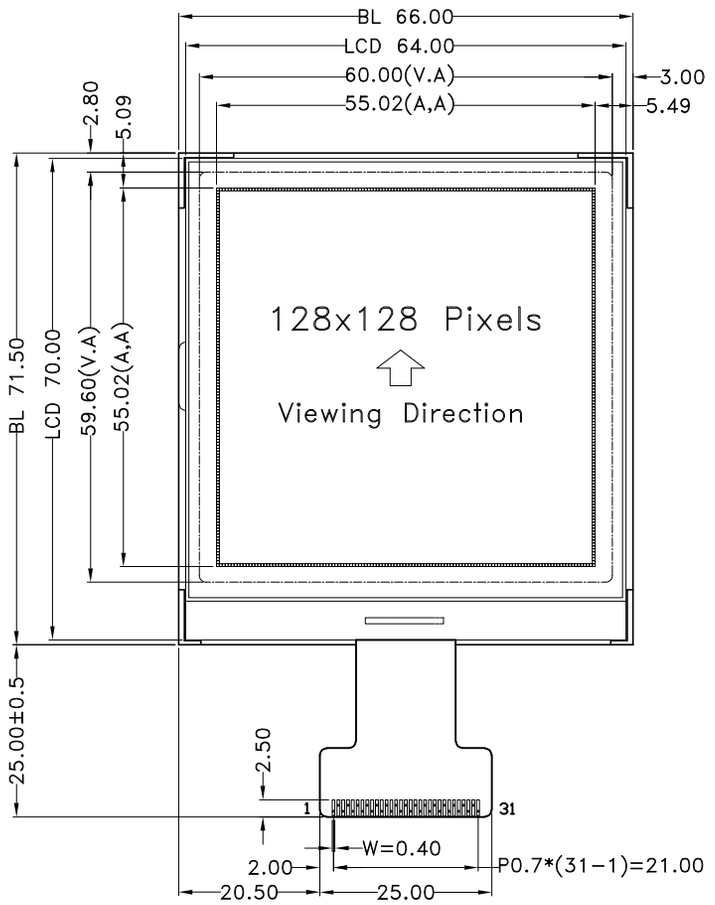

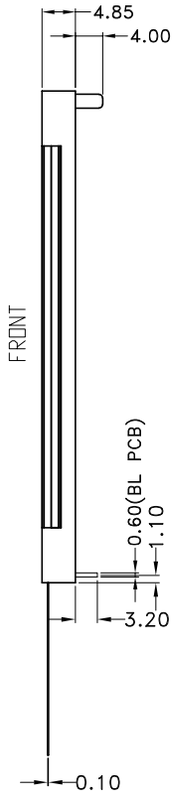

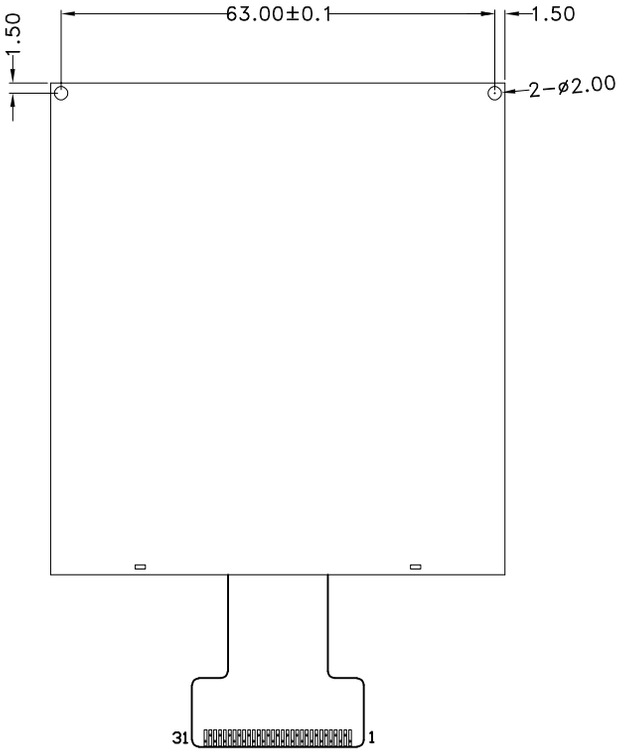

PIN	SYMBOL
1	PS0
2	PS1
3	CSB
4	RESETB
5	RS
6	WR
7	RD
8	DB0
9	DB1
10	DB2
11	DB3
12	DB4
13	DB5
14	DB6
15	DB7
16	VDD
17	VSS
18	VOUT
19	C4+
20	C4-
21	C3+
22	C3-
23	C2+
24	C2-
25	NC
26	C1+
27	C1-
28	NC
29	NC
30	NC
31	NC

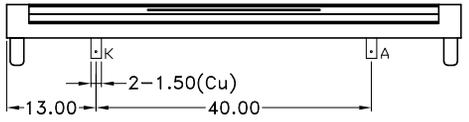

Panel Wiring Details
Scale=free

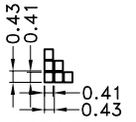

DOT DETAIL
SCALE 5:1

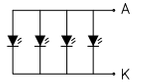

BL Circuit Diagram

*1. LCD Display Type	FSTN,Transflective,Positive		
*2. Viewing Diretion	6H	*6. Storage Temp	-30°C~80°C
*3. LCD Driver Mode	1/128Duty,1/12Bias	*7. Driver IC	SSD1848
*4. Operating Voltage	3.3V	*8. Backlight	WHITE Vf=3.0v If=60mA
*5. Operating Temp	-20°C~70°C	*9. ROHS	

HOT DISPLAY

Dwg Title: HTG128128E-31W-31H07-V01			
ERP No:		Ver: A/0	
Scale 1:1	Unit mm	Tol. ±0.3	
Drawn	Checked	Date: 2025-02-10	